北京科技大学
University of Science and Technology Beijing

换热式两段焦炉
Recuperative Two-step Coke Oven

张欣欣，冯妍卉，徐列
北京科技大学
北京华泰焦化工程技术有限公司

Zhang Xinxin，Feng Yanhui, Xu lie
University of Science and Technology Beijing
Beijing Huatai Coking Engineering consulting Co., Ltd.

目 录

1 项目背景
Background

2 换热式两段焦炉简介
Introduction of Recuperative Two-step Coke Oven

3 技术特点及优势
Technical Characteristics & Advantages

4 理论研究与单元实验
Theoretical Study & Unit Experiments

1.1 焦炉的产生

History of Coke Ovens

- 中国是当今世界焦炭生产、消费和出口第一的大国，**焦炭总产量占全世界焦炭产量的60%以上**，是全球焦炭生产和供应的中心。
- ➢ **Coke production in China accounts for more than 60% of global production.**
- 1735年，焦炭炼铁获得了成功，带动了炼焦工业的发展。第一座蓄热式焦炉1884年建成。近300年间，**焦炉结构的发展大致经过四个阶段**(Four stages)：
  - 成堆干馏-(Carbonization by original method)
  - 倒焰式焦炉-(Flame coke oven)
  - 废热式焦炉-(Waste-heat coke oven)
  - 现代的蓄热式焦炉-(Regenerative coke oven)

蓄热式6m

多点供热 7.63m

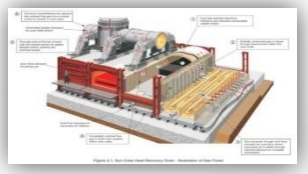

热回收焦炉

SCOPE21

1.2 焦化行业现状
Coking Industry in China

China and global coking production from 1992 to 2012

In china, coking production is 476.36 million tons in 2013

中国炼焦企业遍布全国

Coking plants operate all over the country.

中国焦炭占世界比率日益增大

The percentage of China accounting for global coking production keeps increasing.

1.3 焦化行业面临的挑战

Challenges in Coking Industry

目前炼焦行业生存压力大，主要表现在：

1)对煤质量要求较高(Requirement of High-quality coal)：炼铁对焦炭质量的高要求引起大量优质不可再生煤的投入；

2)污染严重(Heavy pollution)：炼焦过程产生大量含有有毒物质的燃烧烟气和废水，严重危害人类健康和生存环境，且难处理；

3)能耗高(High energy consumption)：现代焦炉热效率在80%以上，但热工效率只有70%，有用热量不超过50%；

4)成本高(High cost)：炉体复杂的结构及工艺的控制使得炼焦生产总体投资和运行成本提高。

工业和信息化部: 焦化行业准入条件（2014年修订） 2014年3月3日

Ministry of Industry and Information Technology: coking industry accessible conditions (2014 Revision) March 3, 2014

新的焦化准入条件体现的要求：

控制焦炭总量（Coke production control）
焦化结构优化（Coking structural optimization）
焦化节能环保（Energy saving and environmental protection)
焦化技术进步（Coking technological progress ）

1.4 新型焦炉的必要性

Necessity of New type Coke Oven

- **理想的炼焦新技术应做到：**

① 投资少(Less investment)　② 运行成本低(Less cost)
③ 节　能(Energy saving)　④ 环保(Environmental protection)
⑤ 能够改善焦炭强度(Coke intensity improvement)
⑥ 扩大炼焦用煤范围(Coking coal diversification) .....

- 近年来，**大容积焦炉、捣固焦炉 、干法熄焦**等技术在工业化生产运行中日臻完善；**日本的21世纪新型炼焦工艺、德国的巨型炼焦反应器 、美国的无回收焦炉、前苏联的立式连续层状炼焦**工艺等新工艺加快了工业化进程。但是都未能解决炼焦行业存在的根本问题。

**(High capacity coke oven, Stamp-charging coke oven,
Coke dry quenching, SCOPE21, Huge coking reactor,
Non-recovery coke oven, Vertical continuous laminar coking process)**

- **因此提出“换热式两段焦炉”结构及工艺**

Recuperative Two-step Coke Oven

目 录

1 项目背景
Background

2 换热式两段焦炉简介
Introduction of Recuperative Two-step Coke Oven

3 技术特点及优势
Technical Characteristics & Advantages

4 理论研究与单元实验
Theoretical Study & Unit Experiments

2.1 换热式两段焦炉--结构设计

Structure of Recuperative Two-step Coke Oven

干燥预热室、换热室、燃烧室-炭化室一体化的立式结构:

□换热式(Recuperative): 用换热室(Recuperators)取代传统焦炉中的蓄热室(Regenerator);

□两段(Two-step): 由干燥预热室(Drying & preheating chambers) 、干馏室(Carbonization chamber) 两部分组成。

1—干燥预热室
Drying & preheating chambers

2—换热室
Recuperators

3—燃烧室-炭化室
Combustion & coking chambers

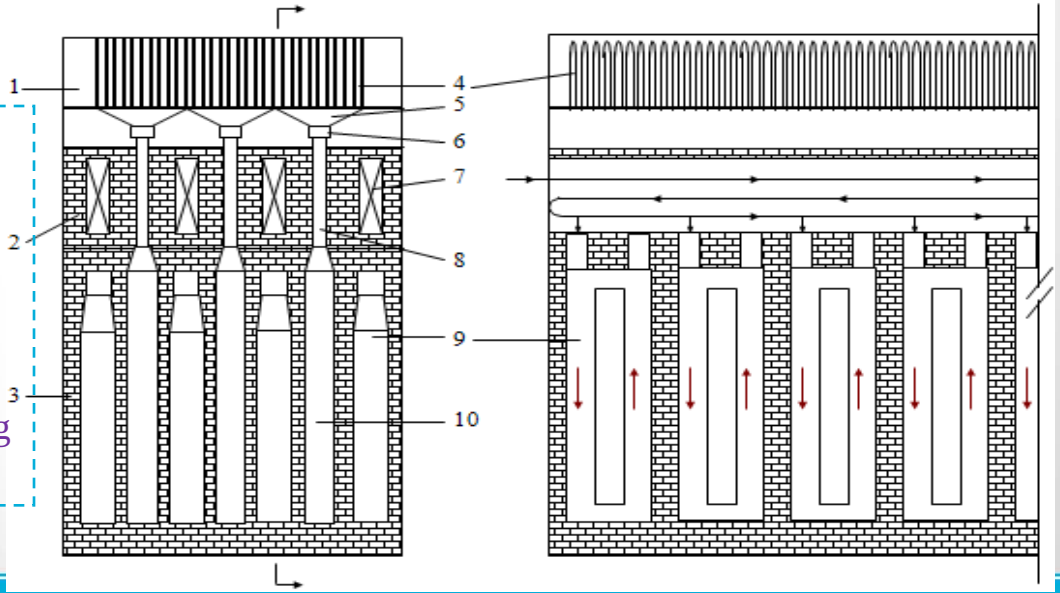

2.1 换热式两段焦炉--结构设计

Structure of Recuperative Two-step Coke Oven

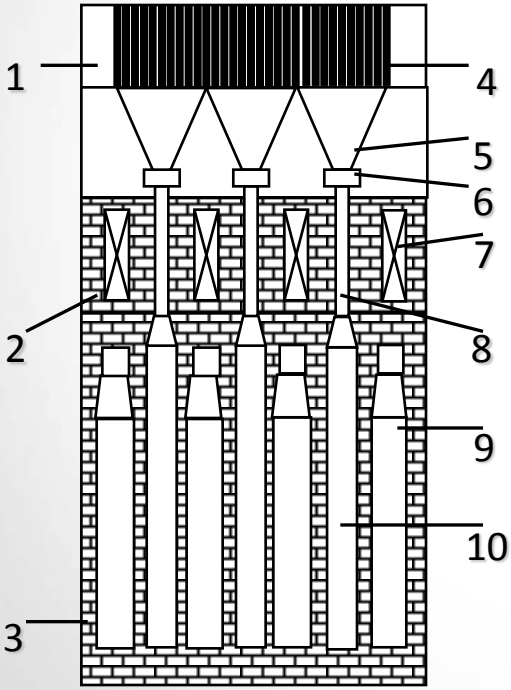

1—干燥预热室 Drying & preheating chambers
2—换热室 Recuperators
3—燃烧室-炭化室 Combustion & coking chambers
4—金属换热管道 Metallic pipelines
5—放煤漏斗 Coal funnels
6—放煤阀 Coal valves
7—煤气/空气管道 Air/ Gas pipelines
8—输煤管道 Coal pipelines
9—燃烧室 Combustion chambers
10—炭化室 Coking chambers

2.2 换热式两段焦炉--工艺流程设计

Process of Recuperative Two-step Coke Oven

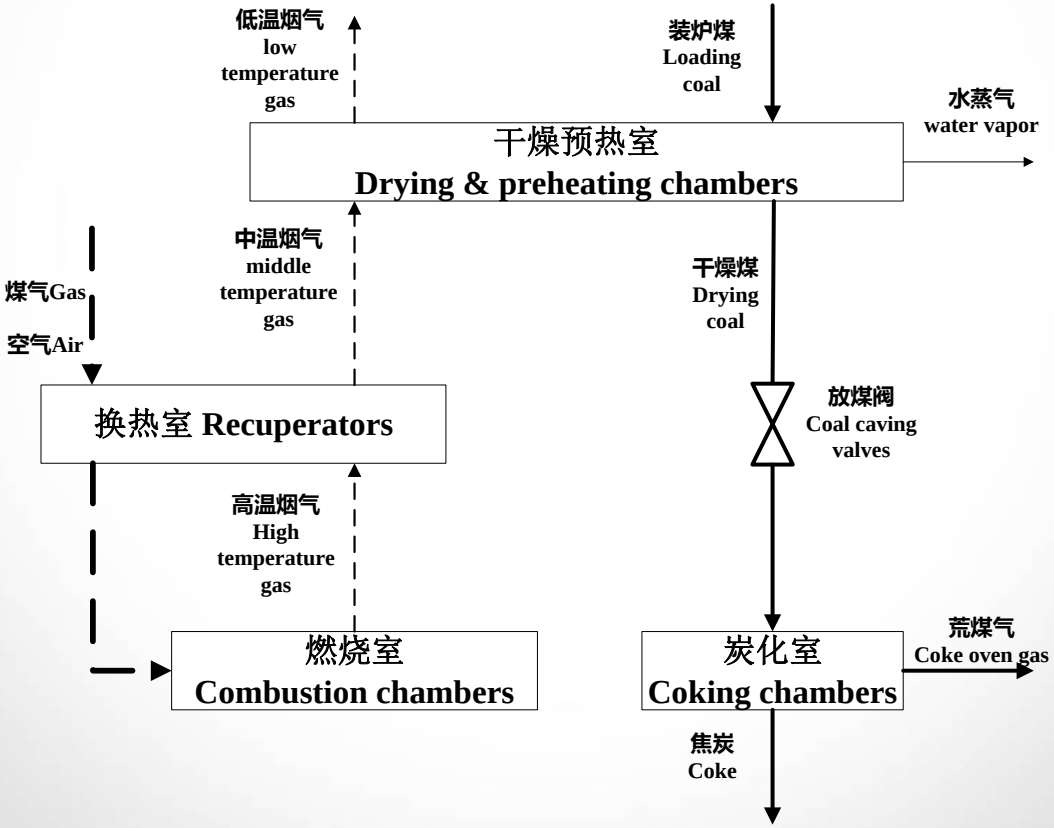

气体流程

煤预热干馏过程

2.3 换热式两段焦炉--干燥预热室特点

Characteristics of Drying & Preheating Chamber

- 干燥预热室包括干燥预热室烟气道(Flue pipeline)、煤道(Coal pipelines)、放煤料斗(Coal funnels)、双层放煤阀(Coal valves)等。
- 干燥预热室与焦炉炭化室一一对应，干燥后的煤仅依靠重力加入炭化室。
- ✓ Drying & preheating chambers are corresponding to and coking chambers, the dried coal can directly mixed in coking chambers by gravity.
- 干燥预热室解决了煤的均匀干燥、预热、干煤安全运输、减少污染等问题。
- ✓ Uniform drying, Preheating, Safe transportation of dry coal, Reducing pollution。

2.4 换热式两段焦炉--换热室特点

Characteristics of Recuperator

- 换热室包括分配烟道、换热管、集合烟道、空气及煤气分配结构;
- 换热式两段焦炉燃烧室采用三联火道结构，一组火道由两个燃煤火道及一个废气火道组成，焦炉燃烧为下焰方式;
- 焦炉由蓄热室改为换热室后，**结构更为简单**，**换热效率更高**;
  - Simple structure, High heat exchange efficiency;
- 加热系统**不需要换向装置**;
  - Heating system can work without reversing arrangement;
- 炉底设有补充加热装置，保证了**高向加热的均匀性**;
  - A supplementary heating device on the bottom is to ensure heating uniformity;
- 每个换热单元对应一组火道，**方便调节**;
  - Each heat exchanger unit is corresponding to a set of flue, easy to adjust.

目 录

1 项目背景
Background

2 换热式两段焦炉简介
Introduction of Recuperative Two-step Coke Oven

3 技术特点及优势
Technical Characteristics & Advantages

4 理论研究与单元实验
Theoretical Study & Unit Experiments

3.1 技术特点

Technical Characteristics & Advantages

1、扩大炼焦煤源、大大节省炼焦成本

Expanding source of coking coal, saving cost of coke

□干燥预热室可将配合煤预热到130-280℃（平均温度约为200℃），使水分基本降到0，大大提高了入炉煤的堆积密度；

➢**Drying & preheating chambers can preheat coal to 130-280℃, the moisture can be reduced, that greatly improving the bulk density of coal;**

□煤干燥后炼焦速度大大增加，有利于提高焦炭质量。

➢**The rate of dried coal Coking is increased significantly, which will improve the quality of coke.**

3.1 技术特点
Technical Characteristics & Advantages

2、减少污染 Reducing pollution

□入炉煤水分为零，可减少约85%剩余氨水量，酚氰污水减少三分之二；

➢The moisture is almost zero, reducing amount of ammonia 85%, waste water was reduced 2/3;

□降低火道温度约100℃，避开了氮氧化物生成温度区间，可解决氮氧化物超标排放难题；

➢The temperature of flue can be reduced by 100℃, solving the problem of excessive emissions of nitrogen oxides;

□封闭装煤，避免了装煤污染。

➢Coal is in isolated system, reducing pollution of coke.

3.1 技术特点
Technical Characteristics & Advantages

3、提高炼焦效率　Improving coking efficiency

□预热煤炼焦时，由于煤中无水分，传热速度快，结焦时间可缩短6 小时;

➢Heat transfer rate is rapid, coking required time can be reduced about 6 hours;

□煤预热后堆比重提高, 产量增长25-30%；

➢Preheated coal can increasing production by 25-30%;

□两个因素同时作用的结果焦炭产量一般可增加50%以上，即75孔6焦炉相当于100孔7焦炉的产量。

➢When combined effect of two factors, coke production can increase over 50%.

3.1 技术特点

Technical Characteristics & Advantages

4、节省能源　Saving energy

□换热式两段焦炉采用干燥预热煤炼焦，占煤料10%左右的水不进入焦炉炭化室，水蒸汽在100℃左右离开煤料，相对于以650℃的荒煤气方式逸出，节能效果显著;

➢Using preheated coal to make coke, the effect of energy saving is significant.

□结焦时间缩短，炉体散热量减少，炼焦煤气消耗量减少，燃烧烟气热损失也相应减少;

➢Coking time can be shortened, heat loss of gas can also be reduced.

□综上总的耗热量可以降低18%以上。

➢The total heat consumption was reduced by 18%。

3.2 效益分析

Efficiency Analysis

- **数据**：2011年中国焦炭产量为4.7亿吨，装炉煤水分10%、焦炭产率75%。
  - Data: The production of coke in 2011 is 0.47 billion tons, moisture is 10%, rate of production is 75%.

- **节能降耗分析**：炼焦耗热量降低18.88%，可节能约730.453亿kcal，相当于节约0.104亿吨标准煤。
  - Energy saving and consumption reducing analysis: Heat consumption is reduced by 18.88%, saving energy by 73.0453 billion kcal ,which is equal to save 10.4 million ton of standard coal ;

- **环保分析**：进入炭化室的煤含水量为0，约0.571亿吨的水不进入炭化室，剩余氨水量可减少约90%，酚氰污水可减少约2/3。
  - Environmental protection: moisture in coking chambers is 0, remaining amount of ammonia can be reduced by about 90%, phenol cyanide waste water can be reduced by about 2/3.

3.2 效益分析

Efficiency Analysis

- **节约资源**：炼焦煤中弱黏性煤的配入量可由20%提高到50%，可节约优质炼焦煤1.712亿吨。
  - Resource conservation: the combination amount of low quality coal can be increased from 20% to 50%; the amount of high quality coal can be saved by 0.1712 billion tons.
- **投资成本**：比常规焦炉节省投资1/3。
  - Investment can be saved by 1/3 when compared to conventional coke oven.
- **生产能力**：焦炉综合生产能力提高50%。
  - The comprehensive production capacity can be increased by 50%.

采用换热式两段焦炉炼焦工艺节能减排潜力巨大，推广换热式两段焦炉，可实现环境效益与经济效益双赢。

Recuperative Two-step Coke Oven has huge potentiality of energy saving and emission reducing, if we popularize it ,Environmental and economic win-win!

目 录

1 项目背景
Background

2 换热式两段焦炉简介
Introduction of Recuperative Two-step Coke Oven

3 技术特点及优势
Technical Characteristics & Advantages

4 理论研究与单元实验
Theoretical Study & Unit Experiments

4.1 工艺参数
Operational Parameters

- 基于换热式两段焦炉炉体结构和工艺流程设计，进行物料平衡和热平衡计算，得到换热式两段焦炉**各节点的工艺参数**。
- Based on the structure and process of recuperative two-step coke oven, the mass balance and heat balance were calculated, the process parameters of every node was obtained.

4.1 工艺参数
Operational Parameters

◻ 系统物料平衡计算
➢ **Mass balance of system**

入 方			出 方		
项 目	数值(kg)	百分比(%)	项 目	数值(kg)	百分比(%)
干煤	34200	38.20	焦炭	25650	28.65
入炉煤带入水	3800	4.24	焦油	1368	1.53
湿高炉煤气量	26054.2	29.10	粗苯	396.72	0.44
空气量	25481.76	28.46	氨	82.08	0.09
			净煤气	5902.92	6.59
			入炉煤带入水	3800	4.24
			化合水	800.28	0.89
			烟气量	51535.96	57.56
合计	89535.96	100.00	合计	89535.96	100.00

4.1 工艺参数
Operational Parameters

◻ 系统热平衡计算
➢ **Heat balance of system**

入 方			出 方		
项 目	数值(*MJ*)	百分比(%)	项 目	数值(*MJ*)	百分比(%)
加热煤气燃烧热	78738.660	91.92	焦炭带出热量	40398.750	47.16
加热煤气带入显热	705.193	0.82	焦油带出热量	2761.445	3.22
漏入荒煤气燃烧热	4427.707	5.17	粗苯带出热量	668.084	0.78
助燃空气显热	533.584	0.62	氨带出热量	149.437	0.17
干煤带入显热	939.218	1.10	净煤气带出热量	14074.912	16.43
煤中水分带入显热	317.832	0.37	水分带走热量	6733.137	7.86
			废气带走热量	13683.547	15.97
			不完全燃烧损失热量	1204.797	1.41
			炉体表面散热损失	5996.354	7.00
总 和	85662.194	100.00	总 和	85670.463	100.00

4.1 工艺参数

Operational Parameters

◻ 燃烧室-炭化室热平衡热平衡计算

➢ **Heat balance of combustion & coking chambers**

入 方			出 方		
项 目	数值(*MJ*)	百分比(%)	项 目	数值(*MJ*)	百分比(%)
入炉预热煤显热	10625.550	7.84	焦炭带走热量	40398.750	29.79
煤气带入的显热	20934.690	15.44	焦油带走的热量	2761.444	2.04
空气带入的显热	20885.720	15.40	粗苯带走的热量	668.084	0.49
煤气燃烧热	78738.660	58.06	氨带走的热量	149.437	0.11
漏入荒煤气燃烧热	4427.707	3.26	净煤气带走热量	14074.912	10.38
			水汽消耗热量	-1845.819	-1.36
			烟气带走热量	74119.235	54.66
			不完全燃烧热损失	1204.797	0.89
			散热损失	4068.369	3.00
总 和	135612.316	100.00	总 和	135599.209	100.00

4.1 工艺参数

Operational Parameters

◻ 换热室和干燥预热室热平衡计算

➢ **Heat balance of recuperator & Drying & preheating chambers**

入 方			出 方		
项 目	数值(*MJ*)	百分比(%)	项 目	数值(*MJ*)	百分比(%)
煤气带入显热	705.193	0.94	煤气带出热量	20934.687	27.78
空气带入显热	533.584	0.71	空气带出热量	20885.716	27.72
烟气带入热量	74119.235	98.36	烟气带走热量	32030.450	42.50
			散热损失	1507.160	2.00
总 和	75358.012	100.00	总 和	75358.013	100.00

入 方			出 方		
项 目	数值(*MJ*)	百分比(%)	项 目	数值(*MJ*)	百分比(%)
煤带入的显热	939.218	2.82	煤带出热量	10625.547	31.92
煤中水分带入热量	317.832	0.95	水带出热量	8578.956	25.77
烟气带入热量	32030.450	96.22	烟气带走热量	13683.547	41.11
			散热损失	399.450	1.20
总 和	33287.500	100.00	总 和	33287.500	100.00

4.1 工艺参数

Operational Parameters

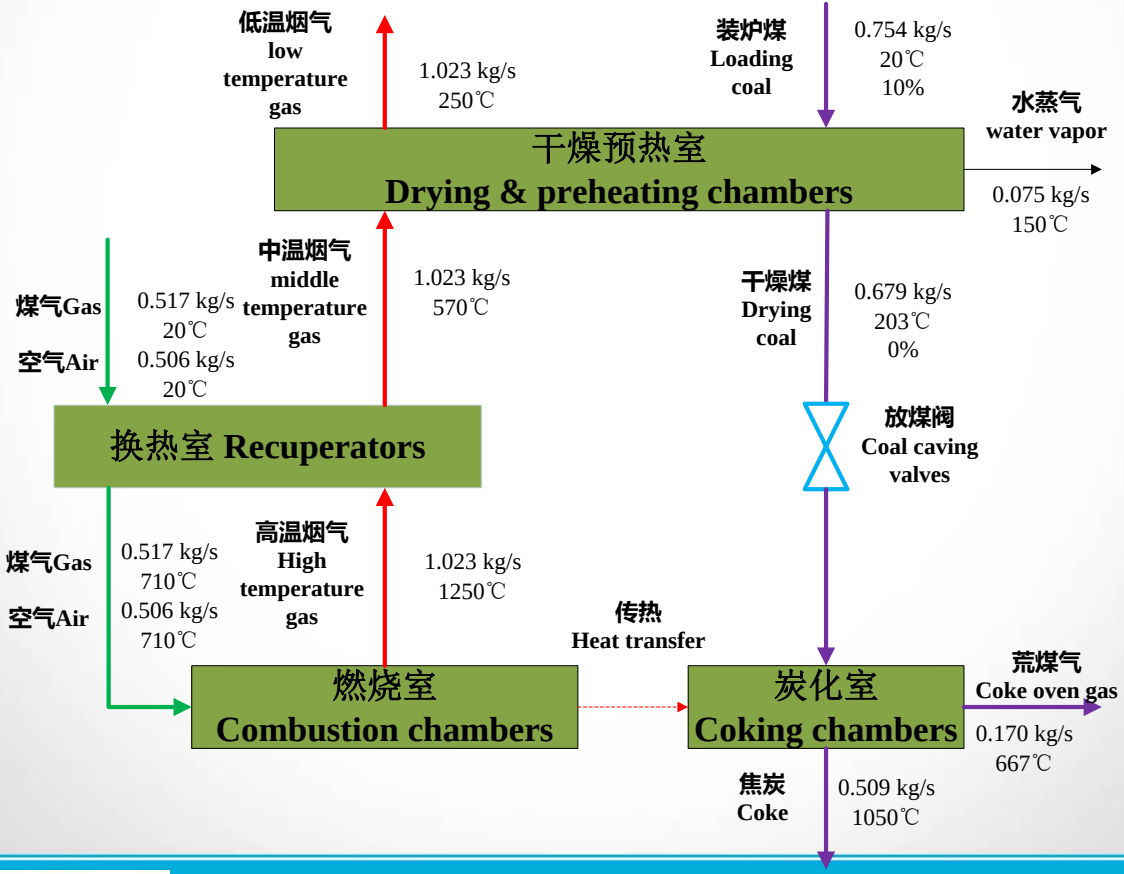

4.2 燃烧室-炭化室的结焦参数计算

Parameters in Combustion & Coking chambers

- 采用数值模拟方法，开展了燃烧室-炭化室的可行性研究，主要考察了立火道出口烟气温度和炭化室所需要的结焦时间。
- **Feasibility Analysis on combustion & coking chambers have been studied by numerical simulation, mainly investigated gas outlet temperature of flue and coking required time of coking chambers.**

4.2 燃烧室-炭化室的结焦参数计算

Parameters in Combustion & Coking chambers

焦炉燃烧室-炭化室物理模型

Physical model of Combustion & Coking Chambers

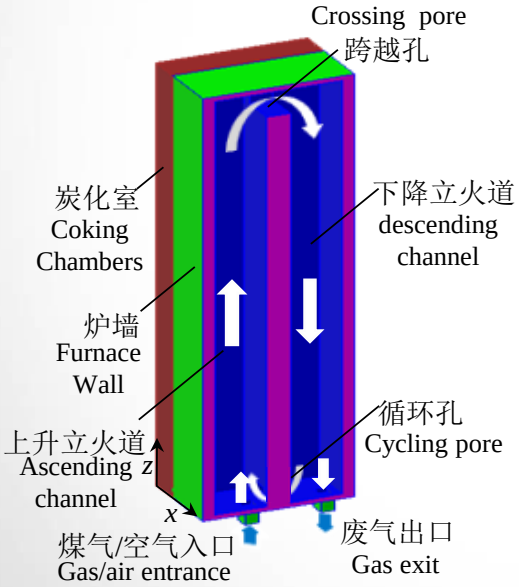

(a) 剖面图

profile chart

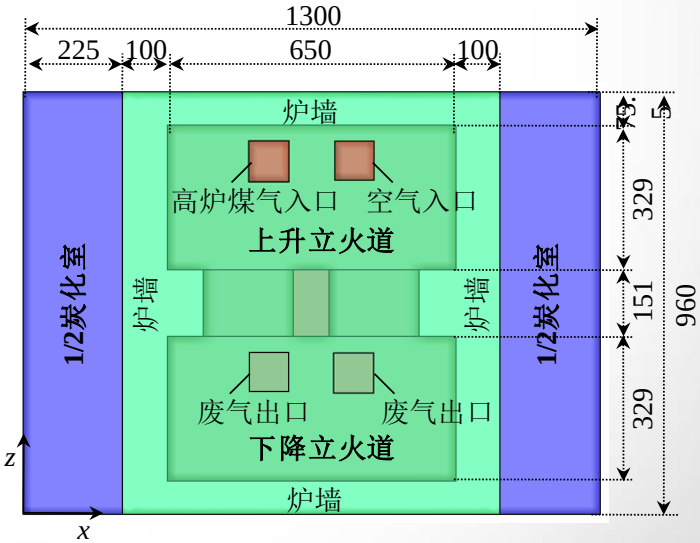

(b) 俯视图

Vertical view

4.2 燃烧室-炭化室的结焦参数计算

Parameters in Combustion & Coking chambers

- 控制方程 **Governing equation**
- 标准k-ε湍流模型、动量方程、能量方程、气相燃烧模型和辐射换热模型，隔墙和炭化室煤-焦的热传导方程
- 数值求解算法：平行解耦算法(**Parallel decoupling algorithm**)

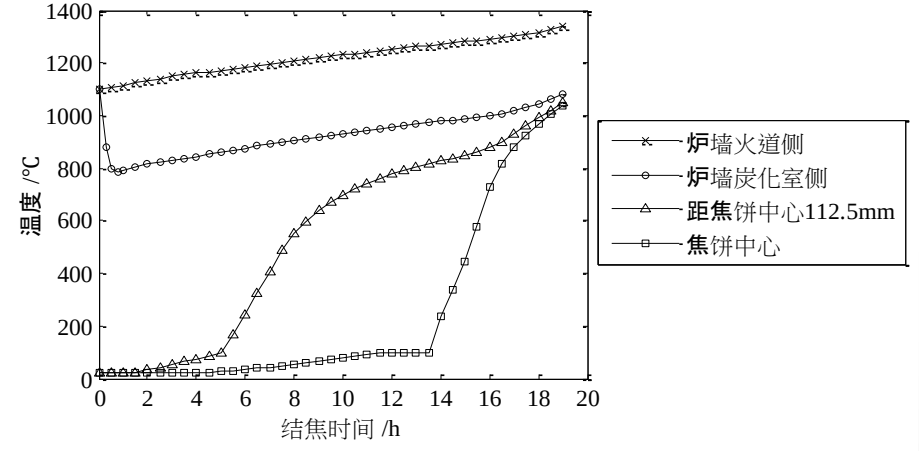

平行解耦算法计算的炭化室(恒热流边界)温度随结焦时间变化

Relationship between the temperature of Coking chamber (constant heat flux boundary) and coking time using parallel decoupling algorithm

4.2 燃烧室-炭化室的结焦参数计算

Parameters in Combustion & Coking chambers

- 控制方程
- 标准k-ε湍流模型、动量方程、能量方程、气相燃烧模型和辐射换热模型，隔墙和炭化室煤-焦的热传导方程
- 数值求解算法：串行解耦算法(Serial decoupling algorithm)

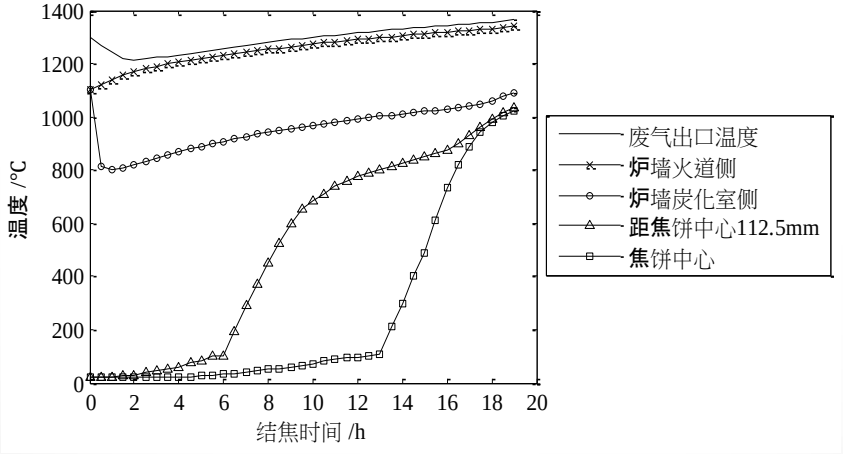

串行解耦算法计算的炭化室温度和立火道出口烟气温度随结焦时间变化曲线

Relationship between the temperature of Coking chamber & Flue and coking time using serial decoupling algorithm

4.3 结构参数优化
Optimization of Structural Parameters

- 开展了干燥预热室结构设计，选择合适的热交换器类型，获得干燥预热室的最优传热结构参数和换热室换热系统的工艺结构尺寸。
- **The structure design of drying & preheating chambers has been Carried out, the Suitable type of heat exchanger was chosen , finally the parameters of optimal heat transfer structure and process structure size of heat exchanger have been obtained.**

4.3 结构参数优化

Optimization of Structural Parameters

◻ 干燥预热室最佳结构尺寸

➢ Optimal structure size of Drying & preheating chambers

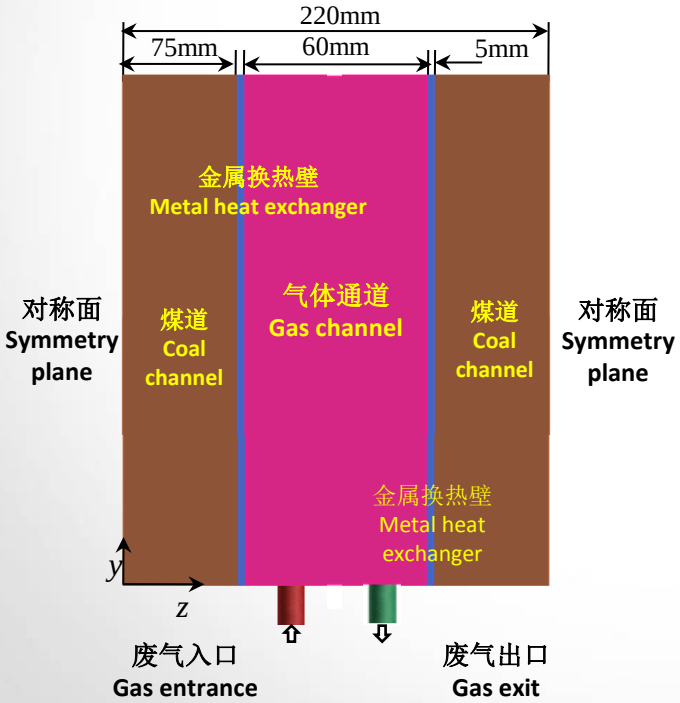

- ➢气体通道截面尺寸：100×60(mm^2)
- ➢循环孔和跨越孔截面：100×60(mm^2)
- ➢喷管尺寸：Φ20，h=100mm，x=75mm
- ➢通道底部倒角：Φ35mm
- ➢通道顶部倒角：Φ100mm
- ➢煤道宽度取150mm
- ➢金属换热壁厚度取5mm
- ➢最小几何单元截面积为220×210 (mm^2)
- ➢最小单元装煤量：79.17kg
- ➢干燥预热室高度：3.35m

4.3 结构参数优化

Optimization of Structural Parameters

◻ 干燥预热室传热优化设计

➢ Optimal heat transfer of Drying & preheating chambers

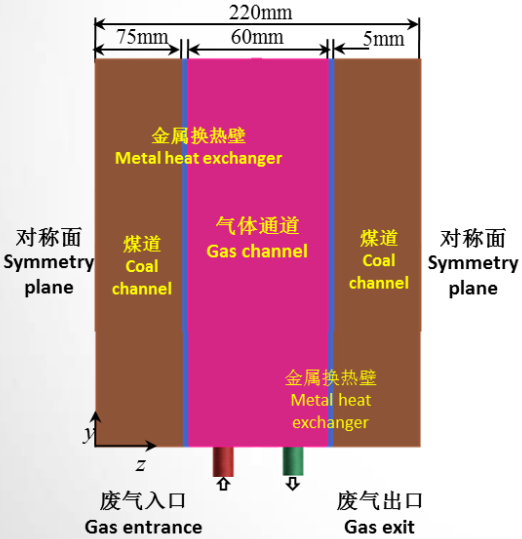

z方向温度分布云图

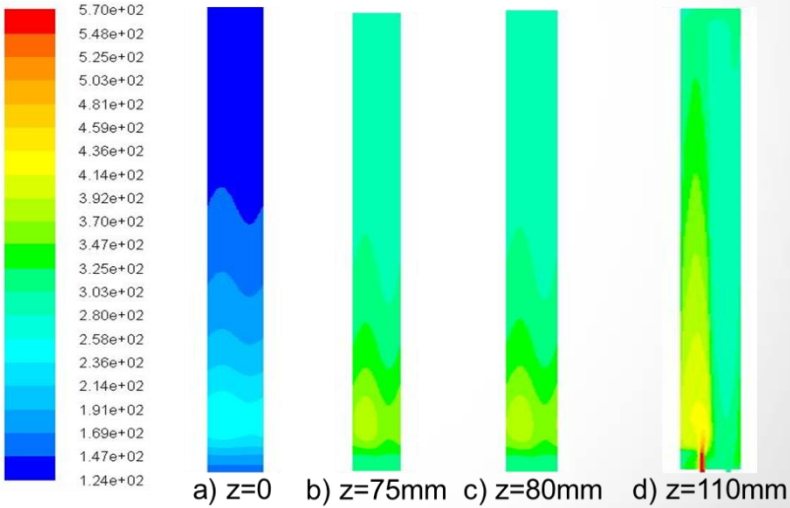

➢从图(a)可以看出，煤料的最低温度为124℃，说明煤料已完全干燥；

➢从图(b)可以看出，煤料与金属接触面最高温度为384.51℃，说明煤料局部出现过热现象，增加了隔热材料。

4.3 结构参数优化

Optimization of Structural Parameters

- 换热室优化计算
  - Optimal calculation of recuperators
- 主要结构尺寸和计算结果列表

名称	数值	单位	名称	数值	单位
烟气流量	0.144	kg/s	壳程长度	1936.00	mm
煤气流量	0.076	kg/s	壳程宽度	600.00	mm
空气流量	0.068	kg/s	管中心距	60.00	mm
煤气/空气进口温度	20	℃	分程隔板槽处管中心距	100.00	mm
煤气/空气出口温度	710	℃	每程换热管长	1676.00	mm
烟气入口温度	1250	℃	管数	80	根
烟气出口温度	570	℃	每程管数	8	根
管子材料	碳化硅		管程数	10	根
管子排列方式	正方形		壳程高度	1000. 00	mm
管内径	30.00	mm	管程压降	3036.165	Pa
管厚度	5.00	mm	壳程压降	0.102	Pa
管外径	40.00	mm			

4.4 单元试验
Unit Experiments

- 根据干燥预热室设计与优化计算结果，搭建干燥预热室比例1：1实验平台，开展了实验测量及数据采集，测试了干燥预热室传热效果和设备可操作性。
- **According to the designed and optimal results of drying & preheating chambers, a one-to-one scale experimental setup was established, experimental and data processing was carried out , the effects of heat transfer and device's operability has been tested.**

4.4 单元试验
Unit Experiments

◻ 实验装置简介
➢ Introducing of experiment device

① 加热系统 (Heating system)；
②供风系统(air supplying system)；
③阀组(valve group)；
④ 干燥预热室本体 (Drying & preheating chambers)；
⑤ 换热室本体 (Recuperators);
⑥测量系统(measurement system)等组成。

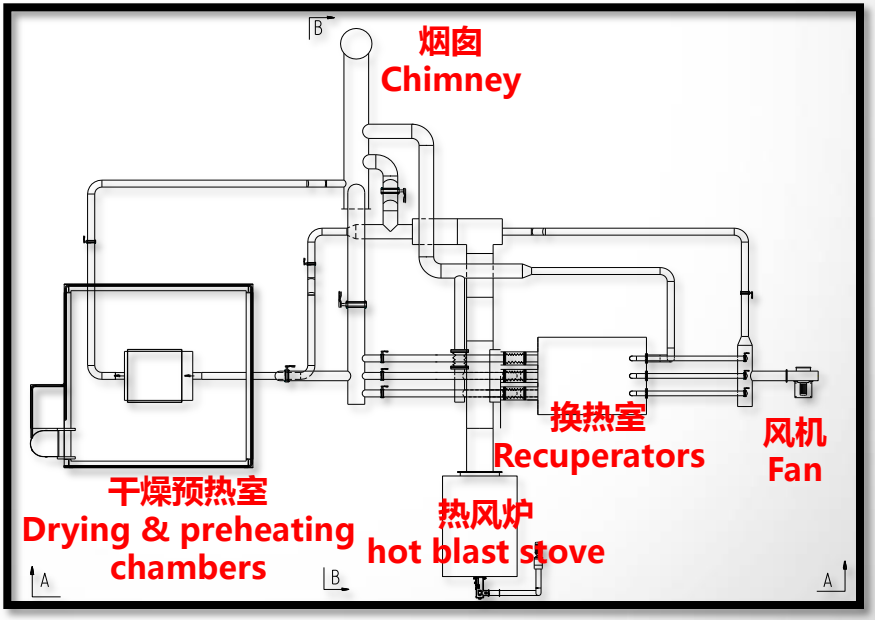

4.4 单元试验
Unit Experiments

◻ 换热室结构
➢ **Recuperator**

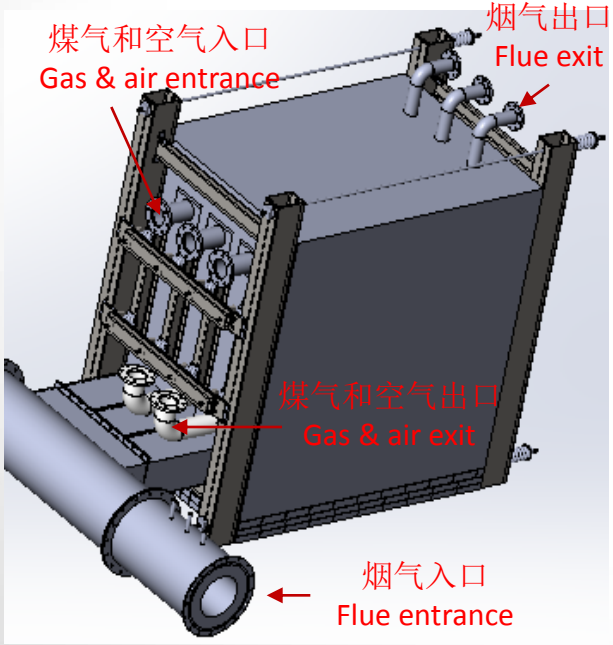

4.4 单元试验
Unit Experiments

- 干燥预热室结构
  - Drying & preheating chambers

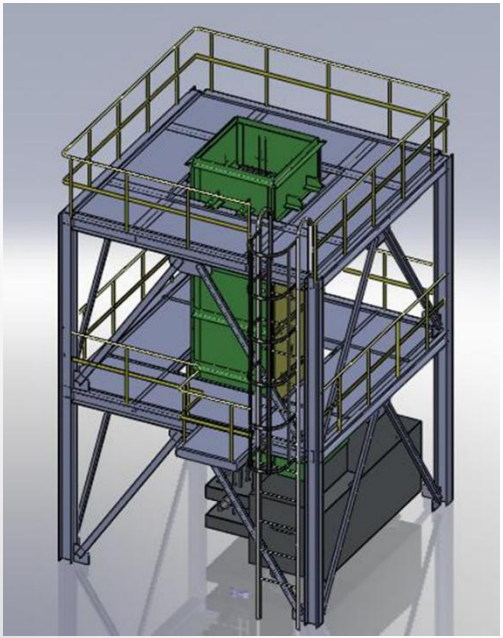

4.4 单元试验
Unit Experiments

- 干燥预热室实验结果
  - Experimental result of drying & preheating chambers

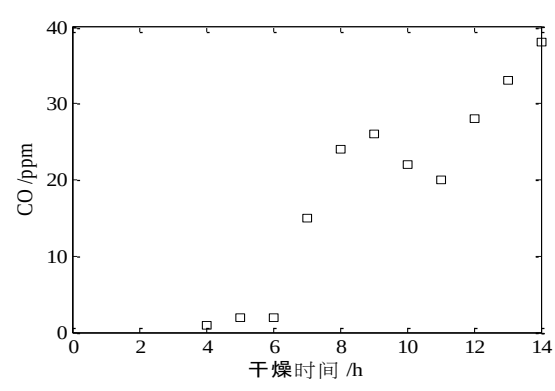

析出气体中CO含量随时间变化

Relationship between CO content and time

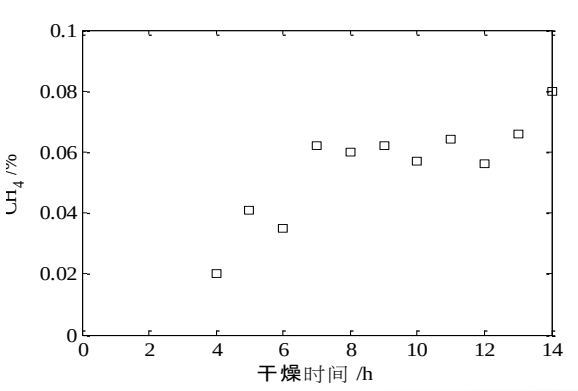

析出气体中CH4含量随时间变化

Relationship between CH4 content and time

- 采用气体分析仪对析出气体的成分进行了监测:
  - We use Gas composition analyzer to monitor generated gas content:
- 随着干燥时间的推移，析出气体中CO和CH4的含量整体呈增大趋势，但含量非常低，属于正常析出，说明煤料在干燥过程中基本不出现焦化现象。
- As the time increasing, gas content of CH4 and CO have an increasing tendency ,but all the content is very low, indicating that there is coking phenomenon during the drying process.

4.4 单元试验
Unit Experiments

◻ 干燥预热室实验结果
➢ Experimental result of drying & preheating chambers

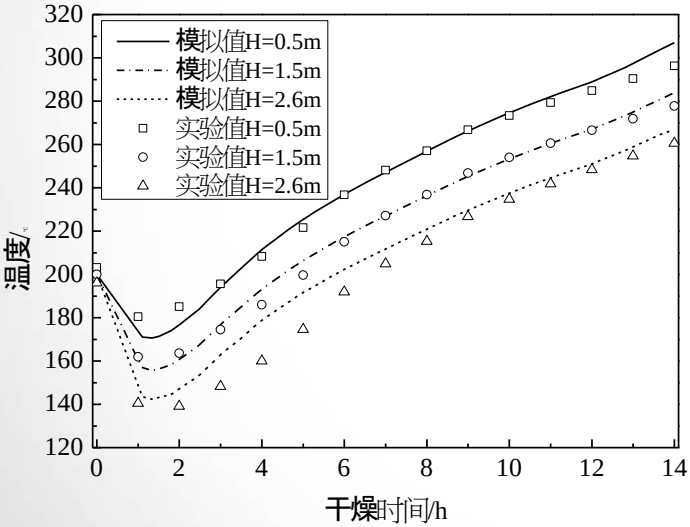

金属换热壁面(煤道侧)不同高度处温度随干燥时间的变化

Relationship between temperature at different heights of metal heat exchanger wall (side of coal channel) and drying time

◻ 煤道壁面温度随干燥时间先降低后升高，不同高度处煤道壁面温差在20℃左右，这是由于烟气采用下喷式结构,导致“上冷下热”现象的发生。

➢ **Temperature on the wall of coal channel first decreased, then increased with drying time, temperature difference of different heights in channel wall was about 20 ℃, which is because structure used for flue gas will lead to phenomenon of nonuniform heating.**

4.4 单元试验
Unit Experiments

◻ 干燥预热室实验结果
➢ Experimental result of drying & preheating chambers

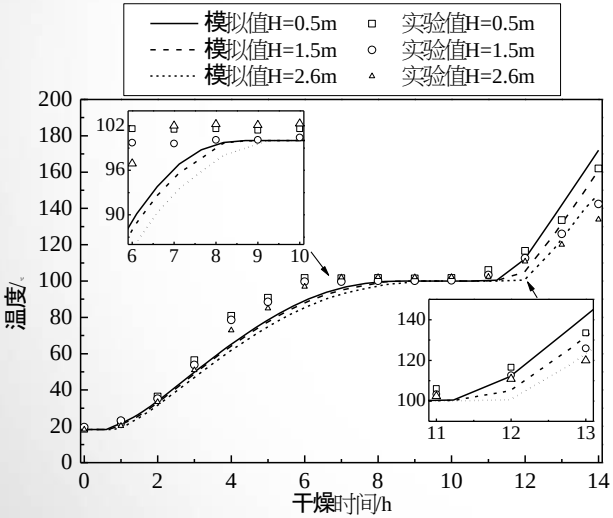

煤道中心不同高度处温度随干燥时间的变化

Relationship between temperature at different heights of middle of coal channel and drying time

- ◻ 干燥前期:煤料中心温升缓慢;
- ◻ 干燥中期:煤料中心温度基本稳定在100℃，验证了水分定温蒸发模型的正确性;
- ◻ 干燥后期:水分完全蒸发，煤料温度急剧升温，模型计算值与实验结果吻合较好。
- ➢ Drying earlier stage: temperature was slowly increasing;
- ➢ Drying medium stage: temperature is stable at 100 ℃, verify the correctness of the model of water evaporation process;
- ➢ Drying later stage: the water is completely evaporated, the temperature heats up, the model calculated values are in good agreement with the experimental results.

下一步工作
Next Work

多孔炉工业实验
Multi-coking chamber industrial experiment

单孔炉半工业实验
Single-coking chamber semi-industrial experiment

理论研究+实验室研究
Theoretical & experimental study

焦炉行业技术开发流程
The development process of coke industry technology

目标 Goal

- **干燥过程** Drying process
- **换热过程** Heat exchanging process
- **低温焦化过程** Coking process
- **煤流顺行** Coal smooth flow
- **系统集成** System integration

Thank For Your Attention !

Zhang Xinxin, Feng Yanhui, Xu lie
University of Science and Technology Beijing
Beijing Huatai Coking Engineering consulting Co., Ltd.